On the EH Antenna

By John S. (Jack) Belrose, VE2CV

Background

In September 2000 I listened to a presentation[1] on the **EH-Antenna** given by the inventor of the so-called antenna, Ted Hart, W5QJR and Bob Zimmerman, NP4B, who was then with the EH Antenna Systems Company. I told them in the Panel Discussion that followed their presentation, that their claims regarding the performance of their antenna (the cone over the disc version) was not in accord with expectation for an antenna so small. And furthermore in my view their concept regarding how the antenna worked made no sense.

On my return to my Laboratory I numerically modeled their EH antenna, using Roy Lewallen, W7EL's EZNEC pro NEC 4D program. The results of this analysis supported my views. But the inventor(s) of the antenna did not accept what NEC 4D told me --- I got more or less a related critique regarding my analysis of the so-called Crossed Field Antenna (CFA) --- viz. that my NEC model was not correctly simulating the performance of this class of antennas. In the inventors' view performance depended on a critical relation between the E and H fields generated separately in some interaction region close to the antenna. And as a result the near field ratio E/H for this class of antennas could be identical to the far field ratio E/H = 377 ohms, the intrinsic impedance of free space. Hence from a transmission line approach the radiation characteristics of the antenna provided a perfect match to the propagation medium, a very efficient radiator.

I was therefore pleased to read the two part article by ***Claudio Re, I1RFQ, entitled "Testing the EH Antenna".*** The conclusion of his experimental study that ***"the EH antenna concept" simply does not exist,*** is in accord with my view. The gains he measured (relative gain referenced to a half wave dipole) are as one would expect for an electrically very small antenna system ***[see antenneX February and March issues, 2003].***

The results of my earlier study, recently updated, are summarized below --- some of the text is paraphrased from my earlier technical correspondence on this antenna.

On the Concept.

The antenna types described as an EH antenna are electrically very very small. No matter how one feeds the so-called EH antenna systems, the antenna will not generate E and H waves that combine in some interaction zone to result miraculously in a very efficient radiator.

The concept claimed by the inventor that feeding the antenna as he does, results in the desired phase and amplitude relationship between E and H near fields to make the antenna an efficient radiator makes absolutely no sense.

The inventor seemed to think **[see reference 1]** that since an inductor is used to tune the antenna (the cone is fed against the disc) and since the inductive reactance is equal to the capacitive reactance of the antenna, the E and H fields generated by the cone and the disc are in time phase since the phase delay through the inductor is equal to phase advance through the antenna's capacitance. This line of thought does not make sense. E and H fields are certainly not generated separately. And, NEC tells us that the antenna's gain is the same with and without tuning, providing we realistically model the antenna by including a loss resistance attributed to the inductor. The inductor is merely a tuning element that cancels the antenna's input capacitive reactance. It therefore results in a better transfer of power from the transmitter to the antenna, and therefore the distant field strength will naturally peak as the inductor is tuned through resonance. But the inductor has a loss resistance, and so no matter how high the Q-factor for this tuning element, electrically small versions of the antenna will be very very poor radiators. This is a characteristic of electrically small antennas: the radiation resistance is small, small with respect to the loss resistances (which include coil loss (to tune) and for antennas close-to-the-ground ground induced loss).

The so-called EH antenna described in the Forum presentation (cone over a disc version) is merely an electrically very small upside-down-disc-cone antenna. The disc-cone is an antenna type that has been analytically analyzed, numerically analyzed, and it is widely used for HF/and VHF/UHF communications --- excepting the standard disc-cone antenna has the disc on top (the coax shield connects to the apex of the cone, and center conductor of the coaxial cable connects to the disc) --- c.f. ***J.S. Belrose, "The HF Discone Antenna", QST, Jul 1975, pp. 11-14.***

The disc-cone is a wide band antenna (15:1 frequency BW ratio), having an input impedance of approximately 50-ohms. An explanation as to how it works, in words, follows: at frequencies within the operating range of the antenna, radiation results from a resonance between

the fields that result from current flow over the outside surface of the cone and the bottom surface of the disc. At a point on the structure where the distance between the disc and the cone is a quarter wavelength resonance occurs, and the antenna radiates efficiently.

The EH Antenna is Numerically Modelled

The performance of a disc-cone type of antenna for frequencies below the lowest operating frequency has never been simulated --- so I ran a numerical model (NEC 4D) on my computer. I used 32 radial wires to form the disc, and 32 upward sloping wires to form the cone (cone over disc model). My original model has a disc radius of 2 meters --- the angle between the sloping side of the cone and the disc is 43 degrees --- the cone height is 1.865m --- the apex of the cone is 0.3m above the disc. The ends of these radial wires are closed, to form the edge of the disc and the top of the cone. The height of the disc over average ground (σ =5 mS/m, ε=13) is 3m. My model is shown in **Figure 1**.

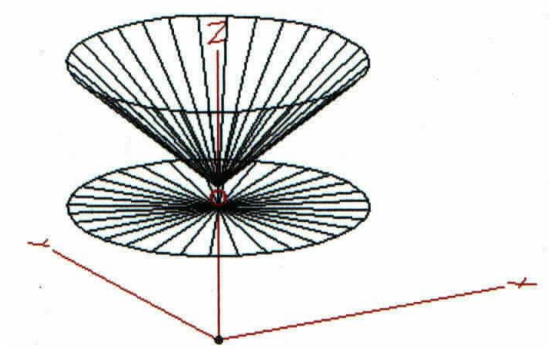

Figure 1 Radial wire model of the so-called EH antenna, a cone over a disc.

<u>For a case study</u> I choose an operating frequency of 3.75 MHz. To calculate radiation efficiency the capacitive reactance of the input impedance is cancelled by an inductive reactance (inductor Q factor 300). In the **Table** below radiation parameters are related to the structure size, total height/wavelength (h/λ). According to NEC-4D I calculate:

Table

h/λ	Antenna's Impedance	Groundwave Gain dB (reference a λ/4 monopole)	VRP Gain (dBi)
0.05	2.1 – j 128	- 7	- 1.9
0.01	0.23 – j 795	- 15.4	- 13.2
0.0074*	0.16 – j 1074	- 19.1	- 16.5
0.005	0.1 – j 1592	- 24.5	- 21.1

*** A size mentioned in the above referenced Panel Discussion, claimed to have virtually 100% efficiency .**

The ground level gain (referenced to a quarter wave monopole), reference height 1.5 m, depends on the characteristics of the antenna and on the ground beneath the antenna. The E-field is calculated at a distance of 200 m (a distance where the radiation field strength (FS) is falling off as 1/distance, i.e. attenuation of the FS by the finite conductivity of the ground is insignificant). The calculated E-field at this distance is referenced to the FS achievable with a practical quarter wave monopole (based on the author's experience).

The vertical radiation pattern (VRP) gain (in dBi) depends on the characteristic of the antenna, on the ground beneath the antenna and, for vertical polarization, dominantly on the ground in front of the antenna.

A Critique of my NEC Model

I corresponded with Bob Zimmerman ***[private communications, October 2000],*** sending him the results of my initial simulation study. His reply, paraphrased follows:

"On your NEC models of Bicones and DiskCones, I find that my impedance data (versus frequency) can only be modeled by allowing a combination of radial and azimuthal current. Doing this allows the antenna to radiate as a superposition of a small electric dipole and a small magnetic loop. The electric dipole carries uniform current equal to the average radial current. The loop carries current equal to the average azimuthal current.

For a given length to radius ratio, such a superposition allows the near field to track the observed near field impedance....which is less than 377 above center frequency and greater than 377 ohms below center frequency.

So please do not use radial wires, as this constrains the current direction and only allows electric dipole radiation.

I realize this seriously complicates your wire system! But if you are serious about this (as I am), you had better do it".

While the above remarks make no sense to me, I followed Zimmerman's suggestion. I completely revised my model, see **Figure 2**. That is the solid surface of the cone and disc are now modeled as a wire grid structure --- the center hole in the disc is because the grid size becomes vanishing small (small with respect to a wavelength) as one approaches the center of the disc. This model is slightly different from my original model, the height of the cone has been lowered, apex height is now the disc height. The source is on a short wire connecting the disc to the apex of the cone.

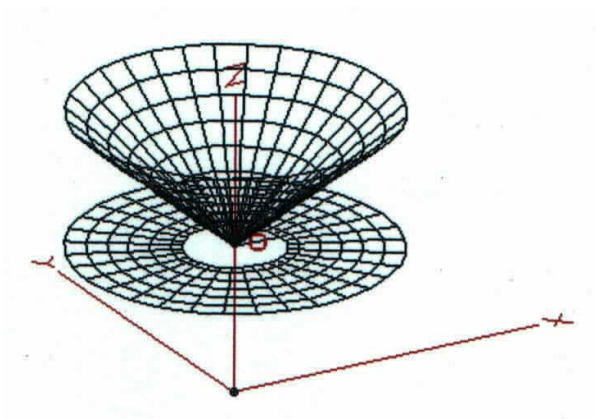

Figure 2 Wire grid model of the so-called EH antenna, a cone over a disc.

For the case study where h/λ = 0.0074, **Figure 2**'s antenna impedance (according to NEC-4D) is 0.15 – j 801 ohms, the gain at ground level is – 18.7 dB referenced to a quarter wave monopole, and the VRP gain is – 16.3 dBi. Compare these values with the values shown in the **Table**. The difference in the antenna's capacitive reactance is taken to be to be due to the difference in the models in the vicinity of the feed points.

Closing Remarks

In **electromagnetic field theory the solution of any antenna problem can be obtained** by application of Maxwell's equations and the appropriate boundary conditions. The field equations themselves are linear and as long as the constants μ, ε and σ of the media are truly constant, that is, do not vary with the amplitude of the signal (linearity) nor with direction, certain network theorems have proven very useful in simplifying the solution of many problems. An important theorem is the ***Superposition Theorem****.

NEC calculates the net effect of many small current elements, each producing an E-field (and an H-field) at some distant point. The sum of all these fields is the net field. The proof that NEC does work for so many types of antennas is taken to be proof of the validity of NEC, of the superposition theory, of the linearity of space and of Maxwell's equations.

EM radiation is produced by the acceleration of charge (RF currents), not through the production of E and H Fields separately, which then combine in space to produce an EM wave.

The theory of the CFA suggests that E and H fields are generated separately and they combine in space to produce the EM wave, in other words ***interaction***. This is not simply vector edition. Such an E and H field metamorphosis in space would violate the principles of superposition[2].

Since virtually all EM theory uses superposition as a basis of its analysis, we cannot even imagine its falsity without overthrowing the whole of the theory.

And, besides this fundamental problem, it is additionally impossible to generate E and H fields separately. **The inventors of the CFA** seem to think that they have generated an E field (produced by the cylinder element) and that this field combines with the H field (produced by the disc element), in an interaction region close to the antenna, to produce an outgoing Poynting Vector (EXH), i.e. an outward flow of power, characteristic of a propagating wave. But even if they could, they seem to have forgotten that the disc also generates an E field, and the cylinder also generates an H field. And so if they did succeed in generating an outgoing Poynting Vector, these other fields would generate an incoming Poynting Vector!!!

And indeed a fundamental characteristic of the CFA (according to NEC-4D and my experiments[3]), which is never ever mentioned by others (including the inventors of the CFA), is that we do indeed have a large reactive outgoing power, and a large reactive incoming power. But this is not a result the explanation of which requires an interpretation concerned with an understanding of the crossed field concept. It simply results from an understanding of two electrically small closely coupled antenna elements fed in quadrature. It does not matter whether the antenna elements are dipoles, monopole or CFA like elements.

The self and mutual impedances or admittances have small real parts, much smaller than the imaginary parts. So when the two sources (two feed points) are 90° out-of-phase, mutual coupling induces a current in phase with the other voltage. This results in a power flow between the two driving ports, but **not in more radiated power** (one source will see a positive

---

* Superposition Theorem: "In a network of generators and linear impedances, the current flowing at any point is the sum of the currents that would flow if each generator were considered separately, all other generators being replaced by impedances equal to their internal impedances".

This fundamental principle follows directly from the linearity of the field equations and Ohm's law. When an impedance or network is linear, a given increase of voltage produces an increase of current that is independent of the magnitude of the current already flowing. Therefore the effect of each generator can be considered separately and independently of whether or not other generators are generating.

radiation resistance, the other source will see a negative radiation resistance). In fact practically the CFA will radiate less power compared with feeding the elements in phase (positive radiation resistances), because in this case we are not faced with the problem of having to reflect all the reactive power that is flowing back. We cannot do this without tuner loss.

The original CFA employed two cylinder shaped elements. The later configuration employed a disc and a cylinder, because it was thought that a disc, at a low height over a ground plane, would be a better generator of an H field.

The EH antenna modelled here is a cone over a finite ground plane. It was thought (as we previous said) that when tuned the current flowing in the inductor and the capacitive reactance of the antenna, would in some way generate a strong EH field, radiating more power than one would expect from an electrically small antenna. Later versions of the EH antenna, tried by amateurs in radio, seem to have (curiously) returned to a configuration something like the original CFA. That is two cylinder elements are separately fed by means of separate matching networks. I say "curiously" because these **pole** versions are said to be EH antennas.

It is curious that the CFA and now the EH antenna have attracted such a wide interest, and claims that such antennas based on an invalid concept are apparently said to work. If antennas that have been tried do in fact radiate effectively (realized performances better than 10 to 25 dB down on a quarter wave monopole), the radiation field must be due to current flowing on the outer surface of the feeder coaxial cable.

The radiation efficiency of the original **biconical dipole** version of the EH antenna (not discussed here) will be much worse. This small structure is not really a radiating antenna system it is merely a capacitor.

Reference

1. Ted Hart and Bob Zimmerman, "An Introduction to the EH Antenna --- A New Class of Antennas to Satisfy the Needs of all Communications Systems", Panel Discussion: The Crossed-Field and E-H Broadcast Antennas, IEEE Broadcast Technology Society Symposium, Vienna, VA, 28 September 2000.

2. John O. Stanley, "A Very Brief Summary of Antennas and Electromagnetic Waves", Panel Discussion: The Crossed-Field and E-H Broadcast Antennas, IEEE Broadcast Technology Society Symposium, Vienna, VA, 28 September 2000.

3. John S. Belrose, "Characteristics of the CFA Obtained by Numerical and Experimental Modeling", Panel Discussion: The Crossed-Field and E-H Broadcast Antennas, IEEE Broadcast Technology Society Symposium, Vienna, VA, 28 September 2000.

John S. (Jack) Belrose, VE2CV
john.belrose@crc.ca
Original version October 2000
Revised March 2003

antenneX Online Issue No. 72 — April 2003
Send mail to webmaster@antennex.com
with questions or comments.
Copyright © 1988-2003 All rights reserved worldwide - *antenneX©*